Pulver-Aktivkohle-Dosieranlage
JETPAK

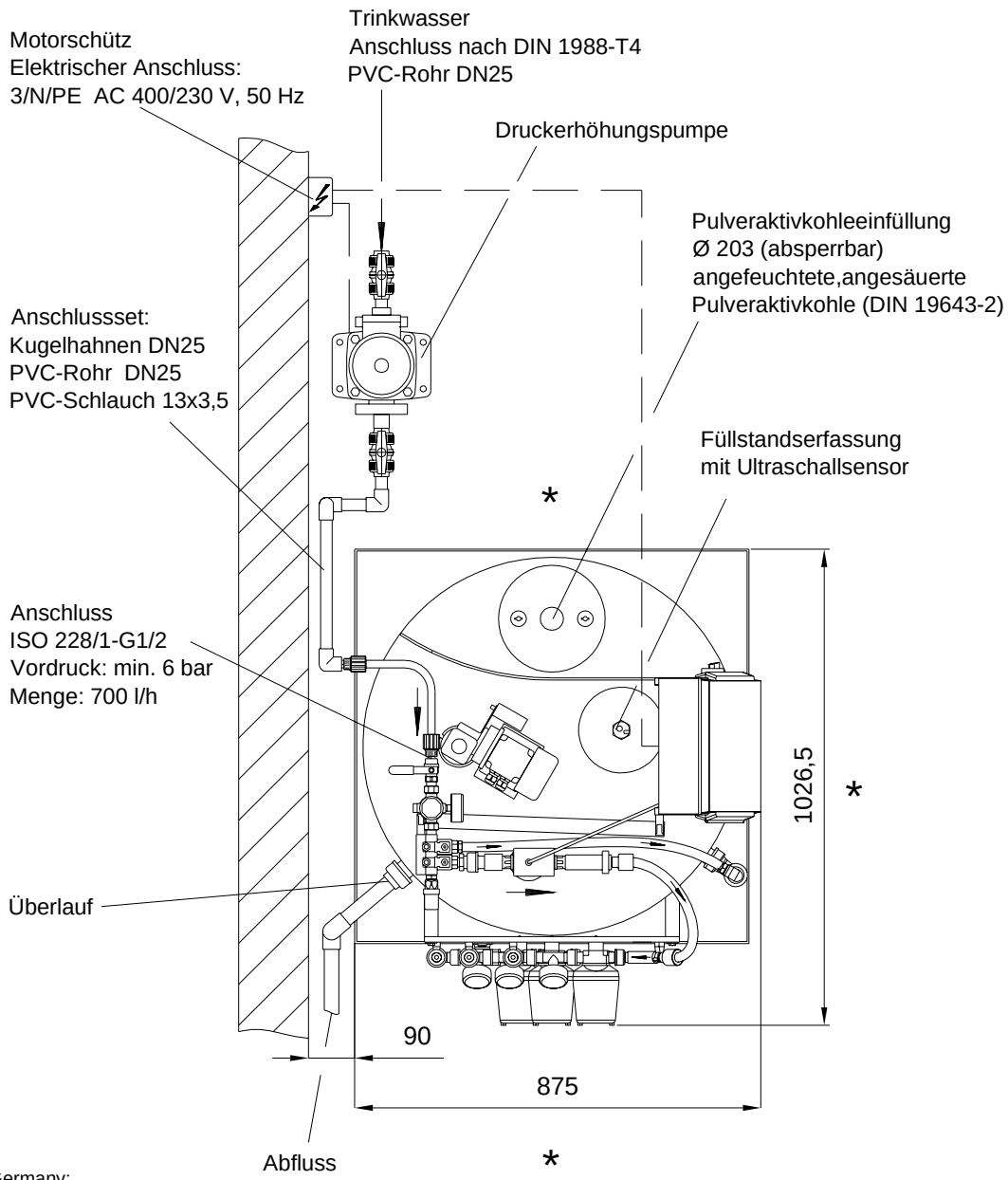

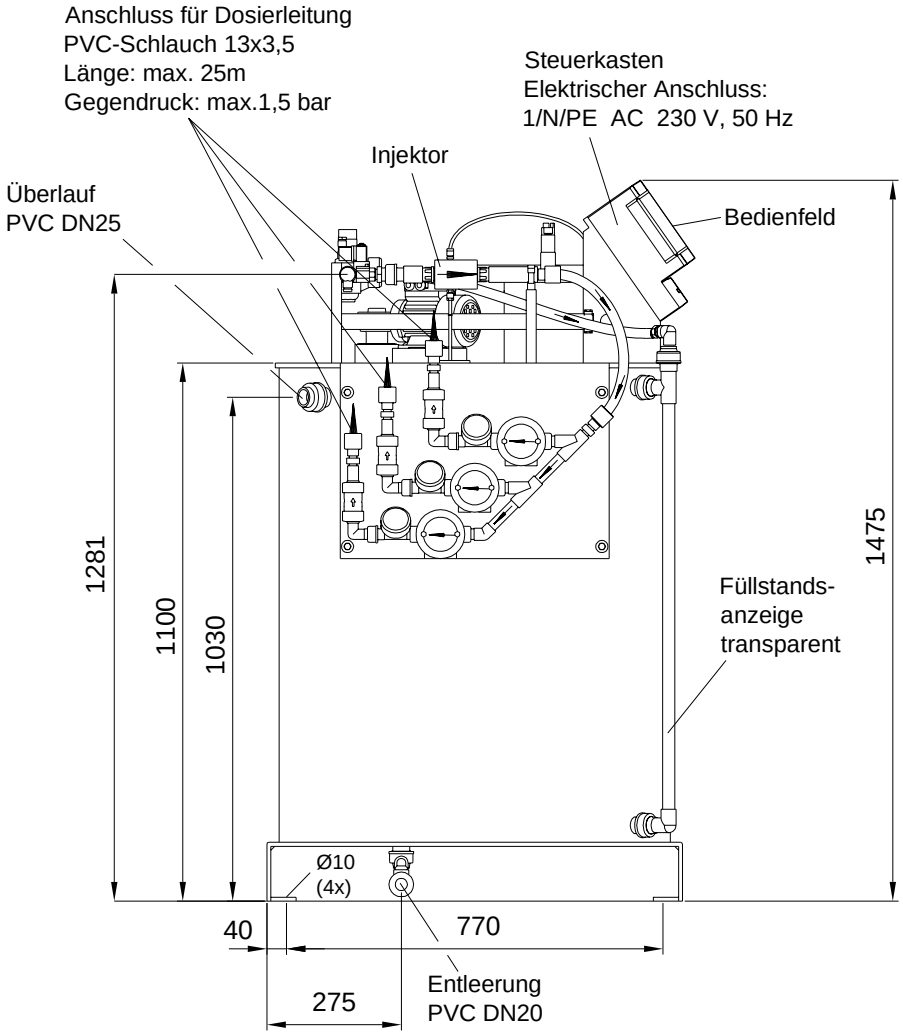

EVOQUA
WATER TECHNOLOGIES

Installation
WT.350.210.500.ID.CN.0714

Germany:
+49 8221 9040
wtger@evoqua.com

* Freiraum min. 1m